# NOTRE DAME UNIVERSITY BANGLADESH

# Project Report

Course Title: Digital System Design Lab
Course Code: CSE 4106
Date of Submission: 09/11/25

Submitted by:
Name: Maria Fardus
ID: 0692230005101003
Name: Tanvir Hossain Ratul
ID: 0692230005101004
Batch: CSE20

Submitted To:
Afsana Sharmin Shanta
Lecturer, Department of CSE
NDUB

**Abstract**

This report details the design, optimization, and simulation of a 4-bit Arithmetic Logic Unit (ALU), a critical component of any digital system or Central Processing Unit (CPU). The primary objective was to implement an ALU capable of executing six fundamental arithmetic and logic operations. A core constraint of this project was the strict prohibition of multiplexer components, necessitating an optimized, purely combinatorial design constructed exclusively from basic logic gates. The methodology involved deriving simplified Boolean equations for both the functional units and the control logic. Furthermore, the design was engineered to accurately generate four status flags—Sign, Carry, Overflow, and Zero—to support sequential control and conditional branching in a microarchitecture. The optimized design was implemented and verified using the Proteus simulation software, confirming full functionality and providing a comprehensive count of the total logic gates used.

**Introduction:**

The objective of this project is to develop a complete and optimized **4-bit ALU** capable of processing two 4-bit operands ($A$ and $B$). The design must be capable of generating the following six specific operations based on control signal inputs:

| Operation | Function |
|---|---|
| F = A | Transfer A |
| F = A + 1 | Increment A |
| F = A - B - 1 | Subtract with Borrow |
| F = A - B | Subtraction |
| F = A OR B | OR |
| F = A NAND B | NAND |

**State Table :**

| S2 | S1 | S0 | Cin | X | Y | F |
|---|---|---|---|---|---|---|
| 0 | 0 | 0 | 0 | A | 0 | Transfer A |
| 0 | 0 | 0 | 1 | A | 0 | Increment A |
| 0 | 0 | 1 | 0 | A | B’ | Subtract with Borrow |
| 0 | 0 | 1 | 1 | A | B’ | Subtraction |
| 1 | 0 | 0 | x | A+B | 0 | OR |
| 1 | 0 | 1 | x | A+B’ | B | NAND |

**Functions:**

$X = S_2 S_1'S_0'(A+B) + S_2S_1'S_0'(A+B') + S_2S_1'S_0'(A+B) + S_2S_1'S_0'(A+B')$

$= A + AS_2S_1'S_0' + BS_2S_1'S_0' + AS_2S_1'S_0' + B'S_2S_1'S_0'$

$= A + S_2S_1'(S_0'B+S_0B')$

$= S_1'A + S_2S_1'(S \oplus B)$

$Y = S_1'S_0B' + S_1'S_0B$

$= S_1'S_0(B+B')$

$Z = S_2'$ Cin

**Circuit :**

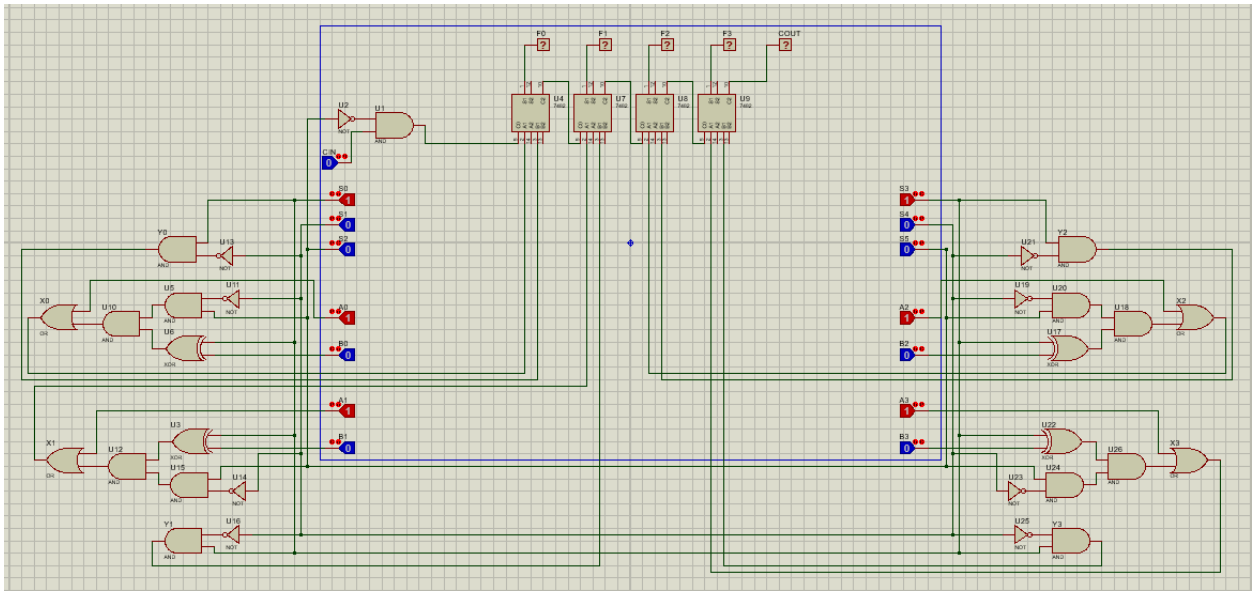


Figure : 4 bit Arithmetic Logic Unit